State of ONF

Saurav Das, Guru Parulkar, Oğuz Sunay, ONF

ONF's Operator Led Mission

Transform Operator Networks

Why?

… to bring capex & opex efficiencies & innovative services

How?

by leveraging

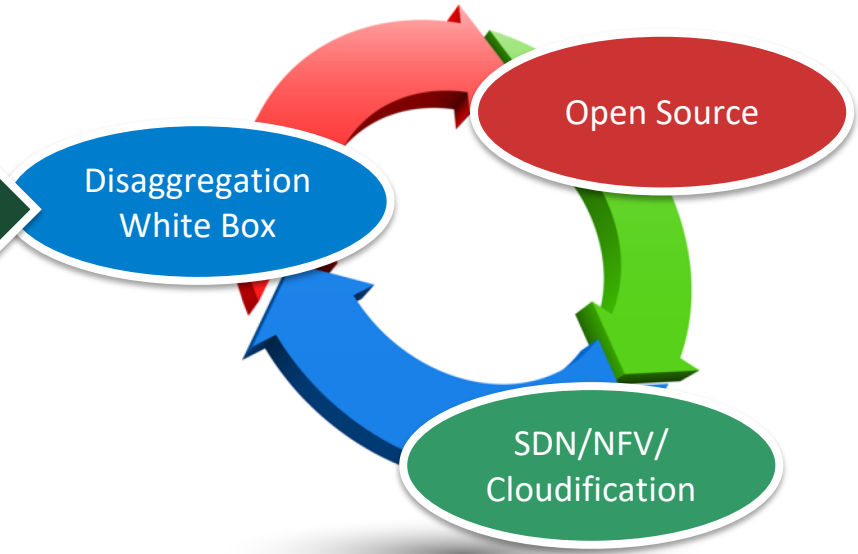

With the focus on Access and Edge

ONF Unique Approach – Operator Led Curated Open Source

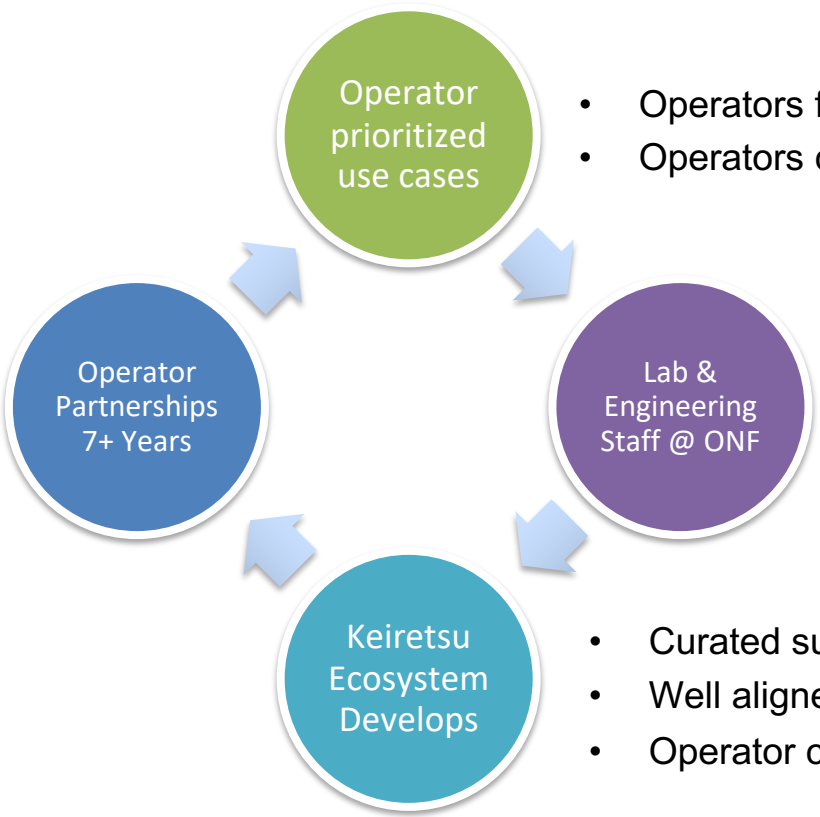

- Operators first agree on common Use Cases to jointly pursue
- Operators commit to deployment

- "Small & mighty" independent engineering team
- Dedicated to the mission with no legacy to protect

- Curated supply chain engages to embrace opportunity
- Well aligned vendors each contribute value to overall solution
- Operator commitment to deployment ensures ROI

Operator Led - Curated Open Source Community

Partners committed to disaggregation, open source and SDN/NFV/Cloudification

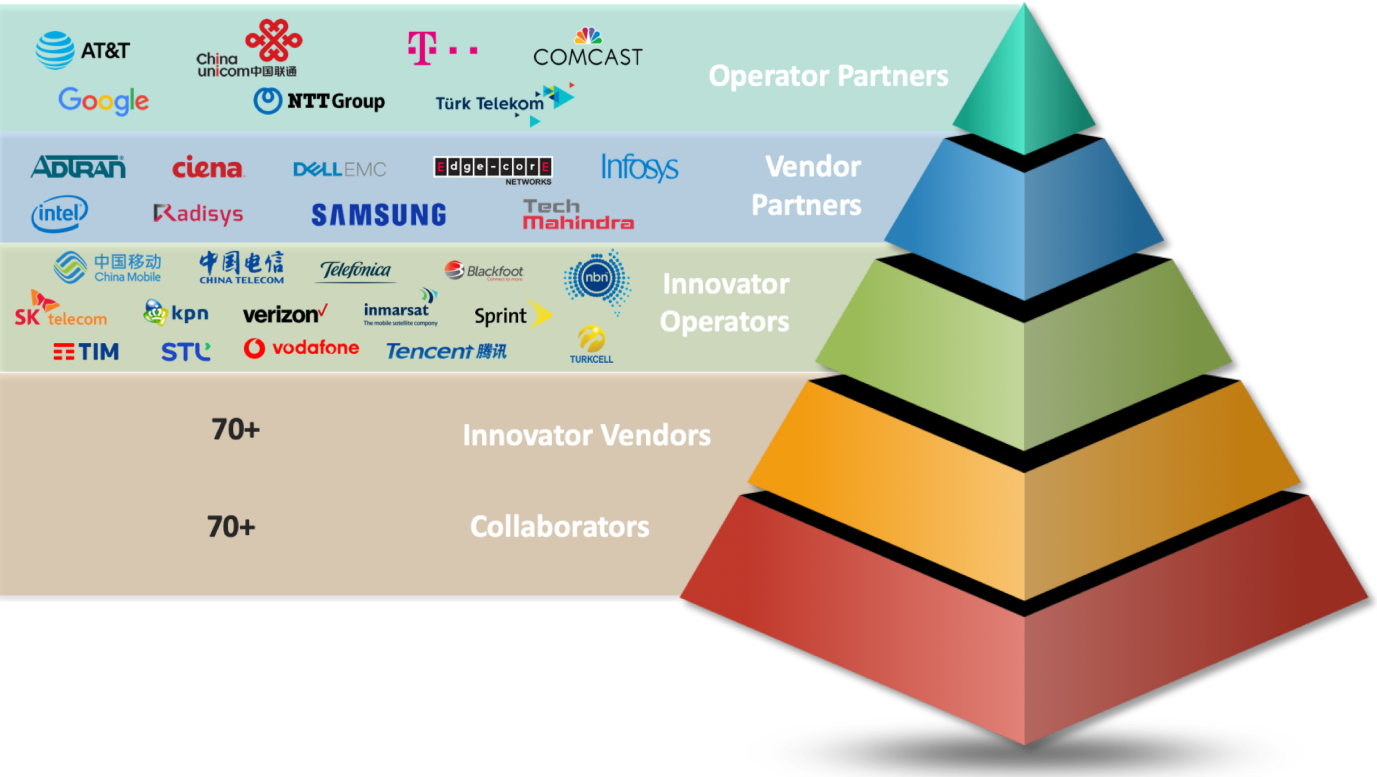

ONF BOARD

- AT&T — Andre Feutsch – CTO & ONF Chair
- T-Mobile — Jochen Appel - VP
- Google — Amin Vahdat - Fellow
- NTT Group — Dai Kashiwa - VP
- COMCAST — Rob Howald - VP
- China unicom — Tang Xiongyan – Chief Scientist
- Edge-corE NETWORKS — George Tchaparian - CEO
- Türk Telekom — Yusuf Kirac - CTO
- STANFORD — Nick McKeown - Prof
- ONF / STANFORD — Guru Parulkar, Exec Dir

Highlights

- All pieces coming together for wireline and mobile access and edge
- Key platforms and solution proven in a tier-1 production setting
  - Trellis: ONOS and leaf-spine fabric with ”real” SDN and white boxes
- Other platforms and solutions proven and quickly moving to production readiness
  - SEBA: VOLTHA, ONOS, NEM (AT&T, DT, TT, …)
  - OMEC: Open source CUPS compliant EPC (DT, Sprint)
  - SD-RAN and Mobile Edge Cloud (China Unicom)
- Exciting forward looking roadmap
  - Next Gen SDN offering: top-down programming, zero-touch operation, network verification, fine-grained measurement, closed loop control
  - COMAC: convergence of access and core

Transforming Wireline and Mobile Access and Edge

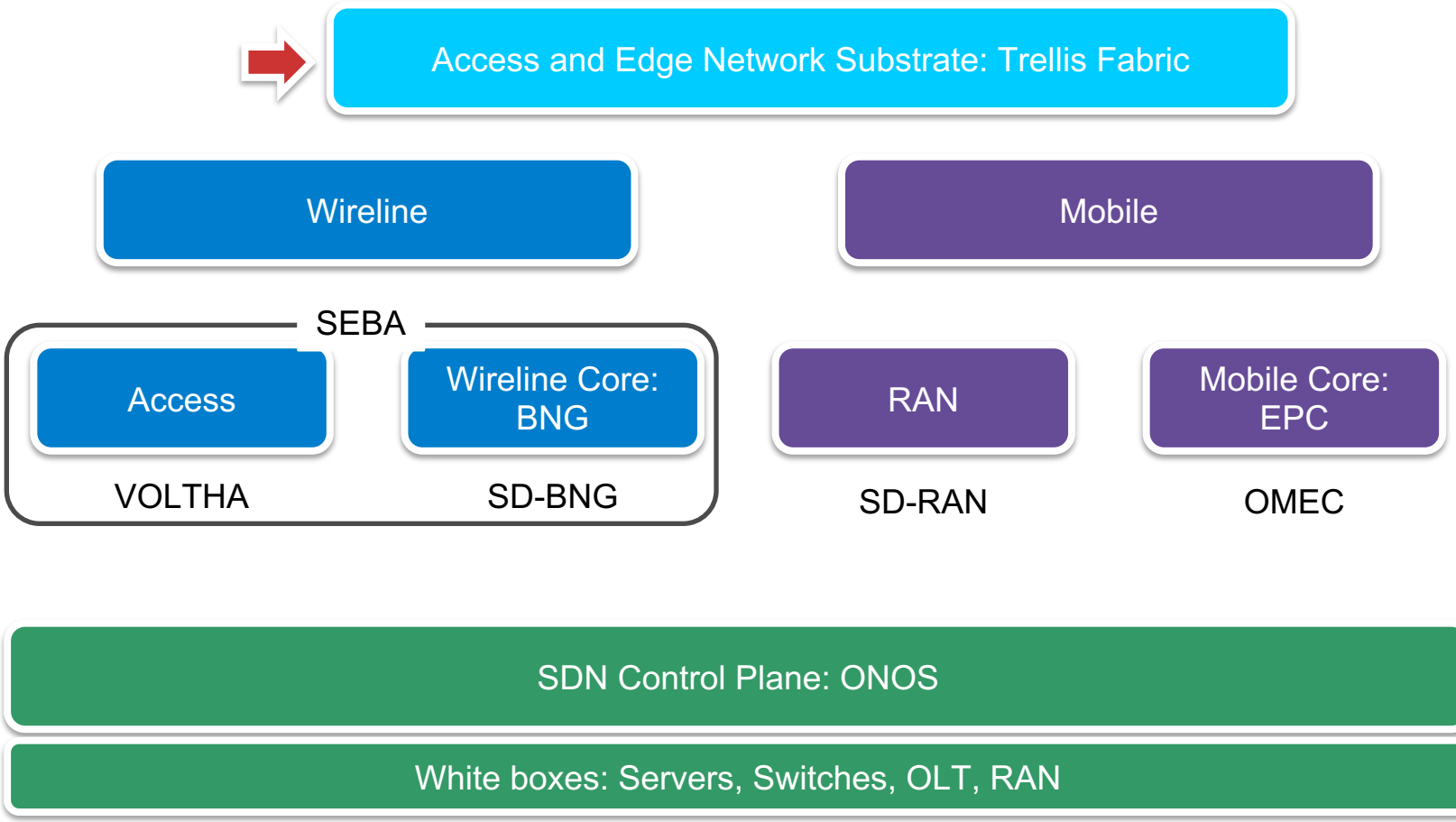

TRELLIS

Production-ready
Multi-purpose
leaf-spine fabric

Trellis apps
IPv4/v6 unicast/multicast, vlans, MPLS SR, vRouter …

ONOS Cluster

Tenets

SDN-based
White-boxes
Open-source

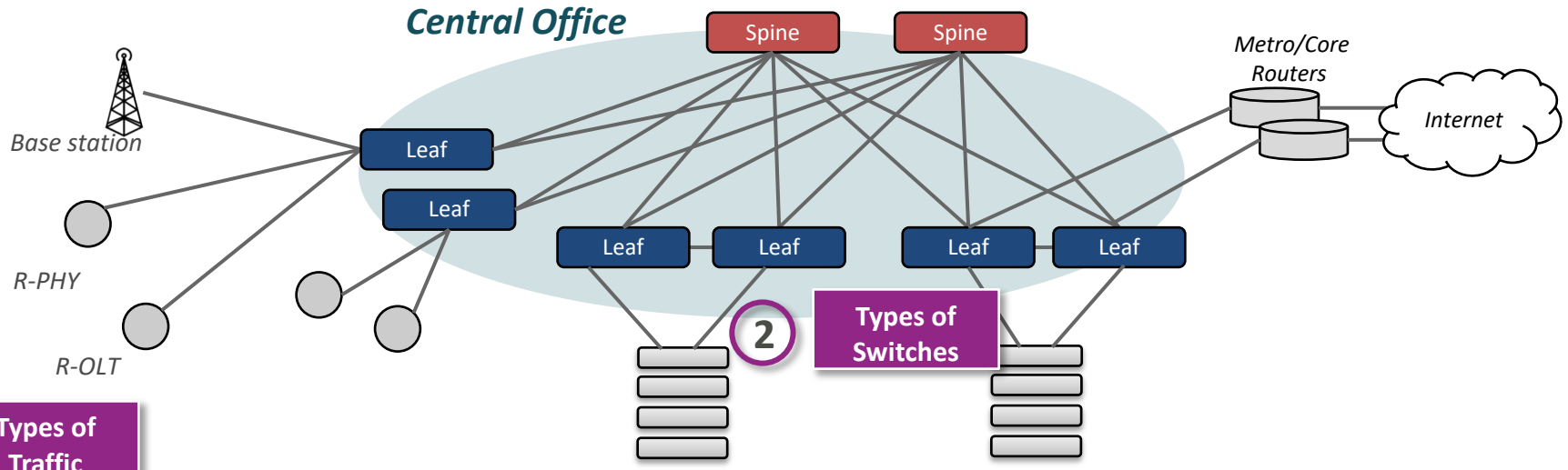

Optimized for Service Provider Access/Edge

ONF

Production-ready Multi-purpose leaf-spine fabric

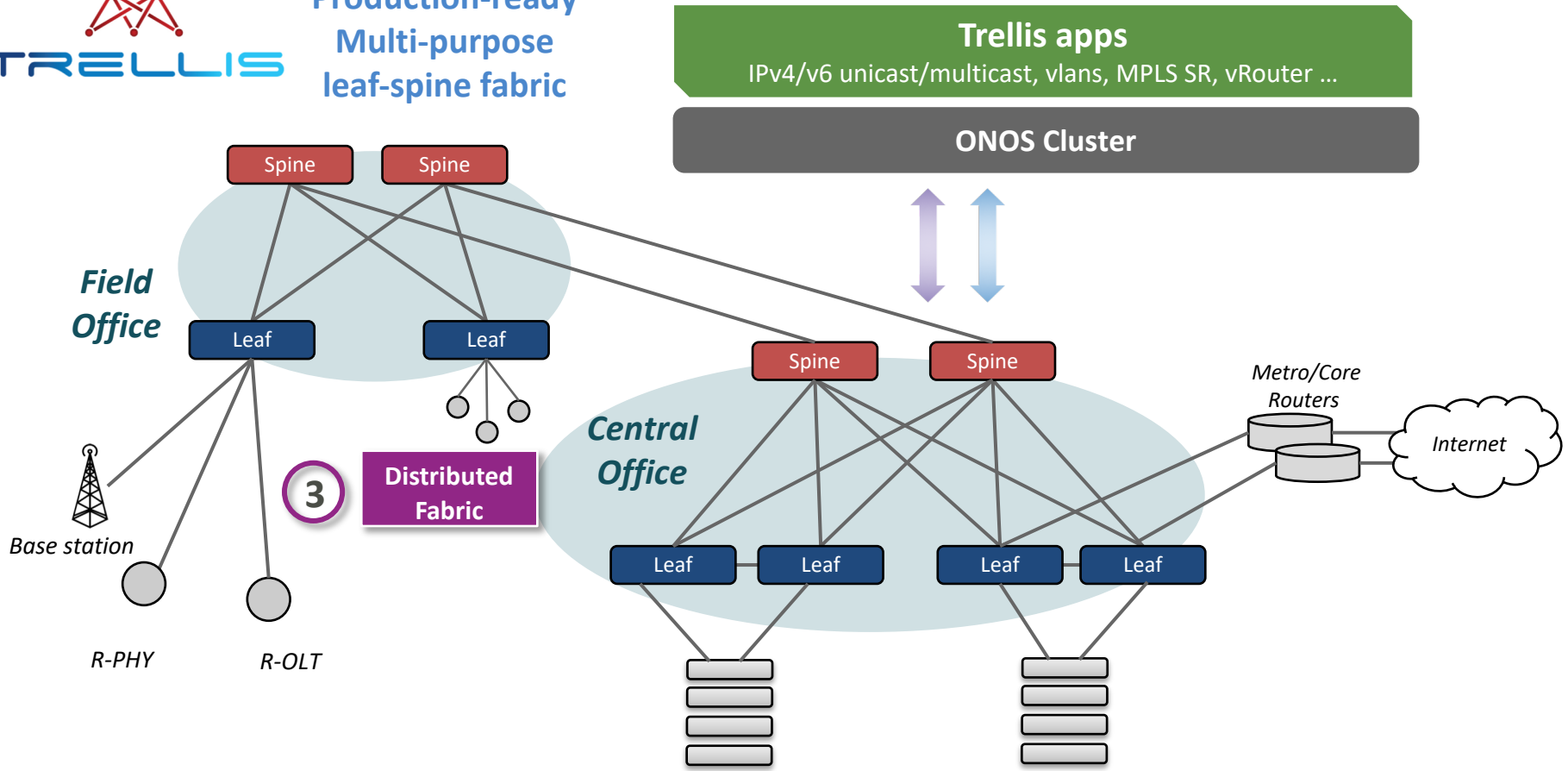

Optimized for Service Provider Access/Edge

Learn more about Trellis – Friday

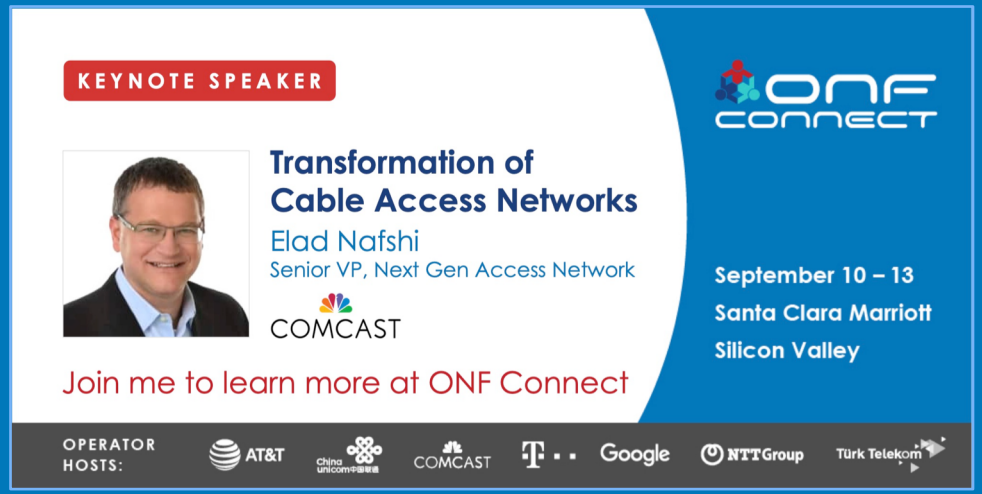

Nitesh Bansal
SVP & Global Head
Engineering Services
Infosys

George Tchaparian
President & CEO
EdgeCore Networks

Saurav Das
VP Engineering
ONF

Transforming Wireline and Mobile Access and Edge

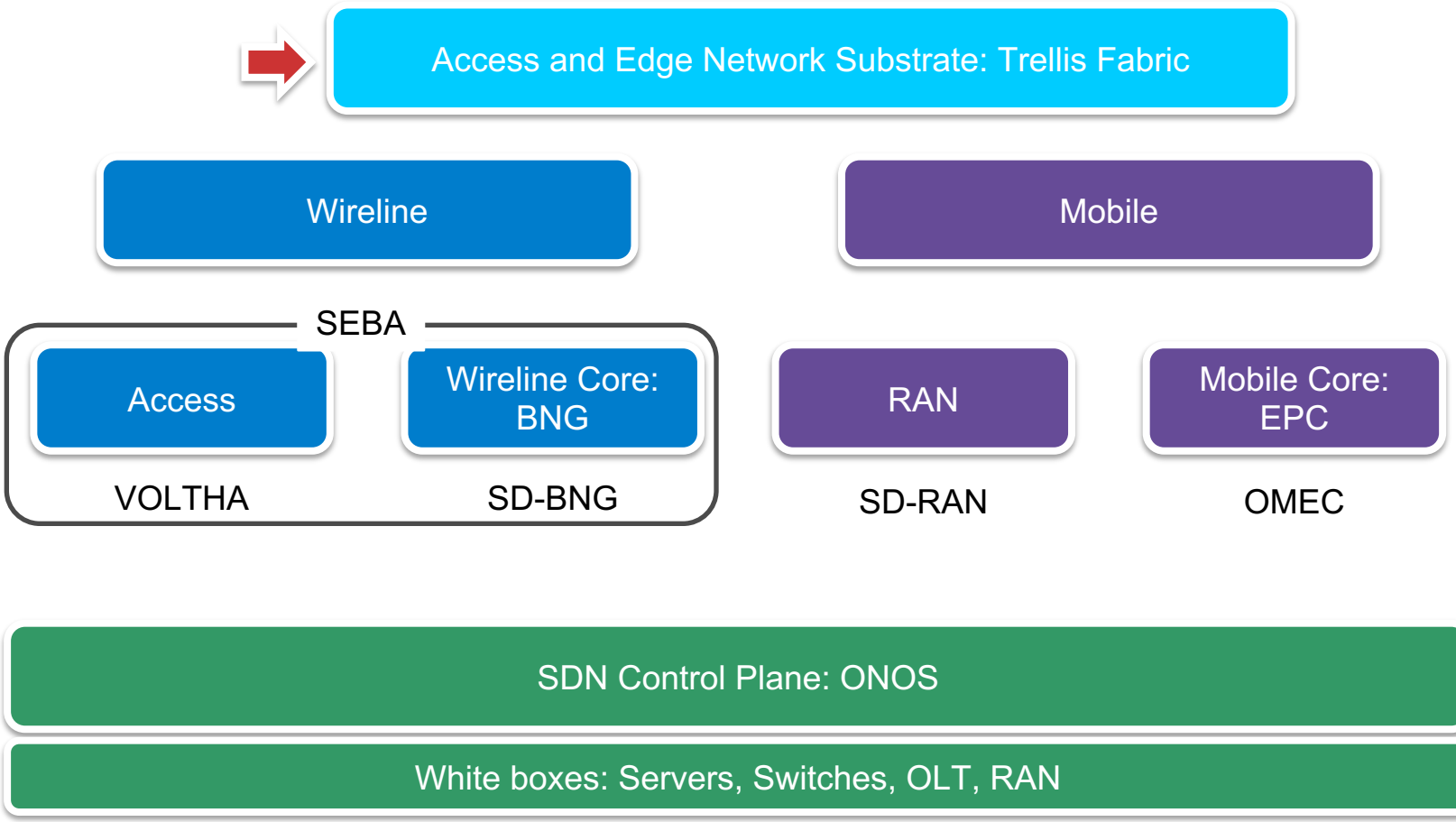

Traditional Wireline Access

RG – Residential Gateway
OLT – Optical Line Termination
BNG – Broadband Network Gateway

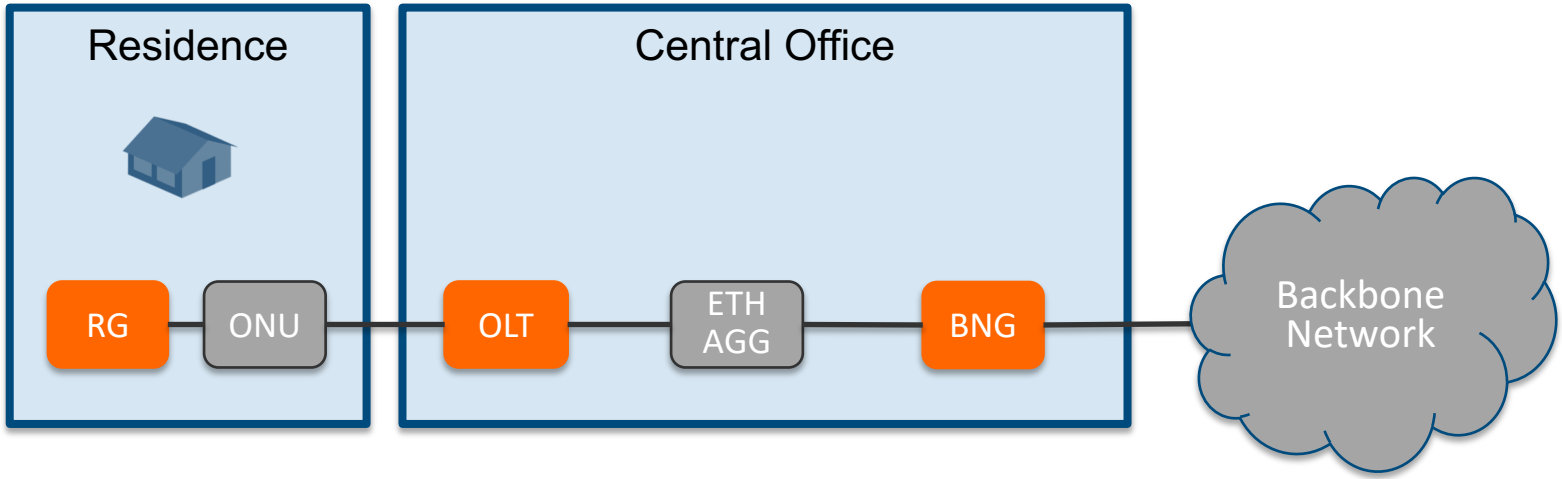

- Each device closed, proprietary, and not programmable
- Source of high capex and opex for operators
- Opportunity to bring SDN, disaggregation, and open source as operators deploy next gen broadband with GPON, XGS-PON, G.Fast, …

SEBA: SDN Enabled Broadband Access

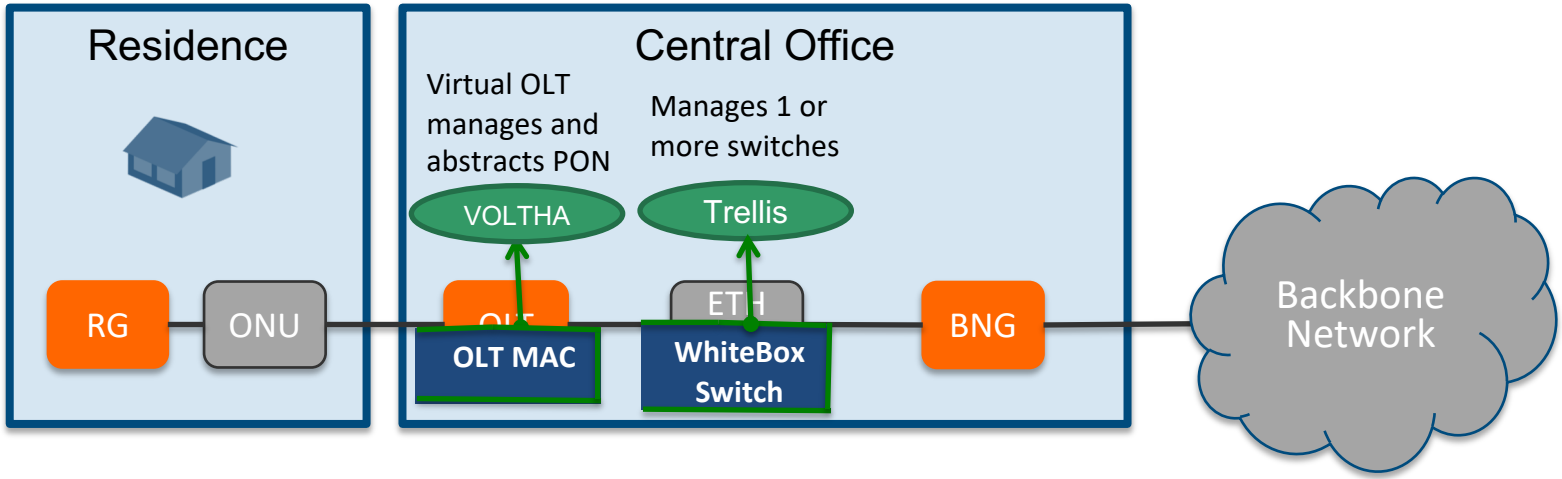

RG – Residential Gateway
OLT – Optical Line Termination
BNG – Broadband Network Gateway

SEBA: SDN Enabled Broadband Access

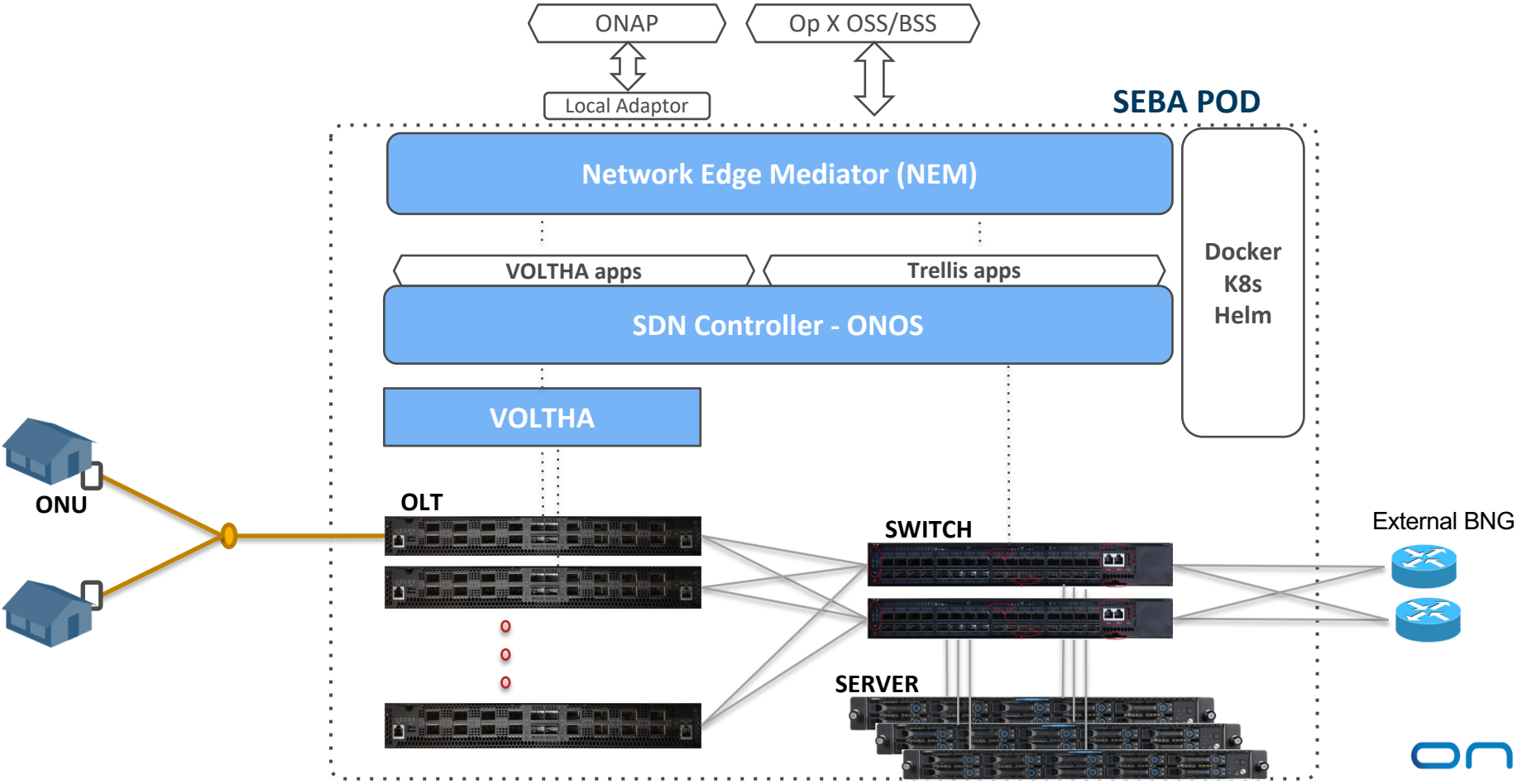

SEBA Update

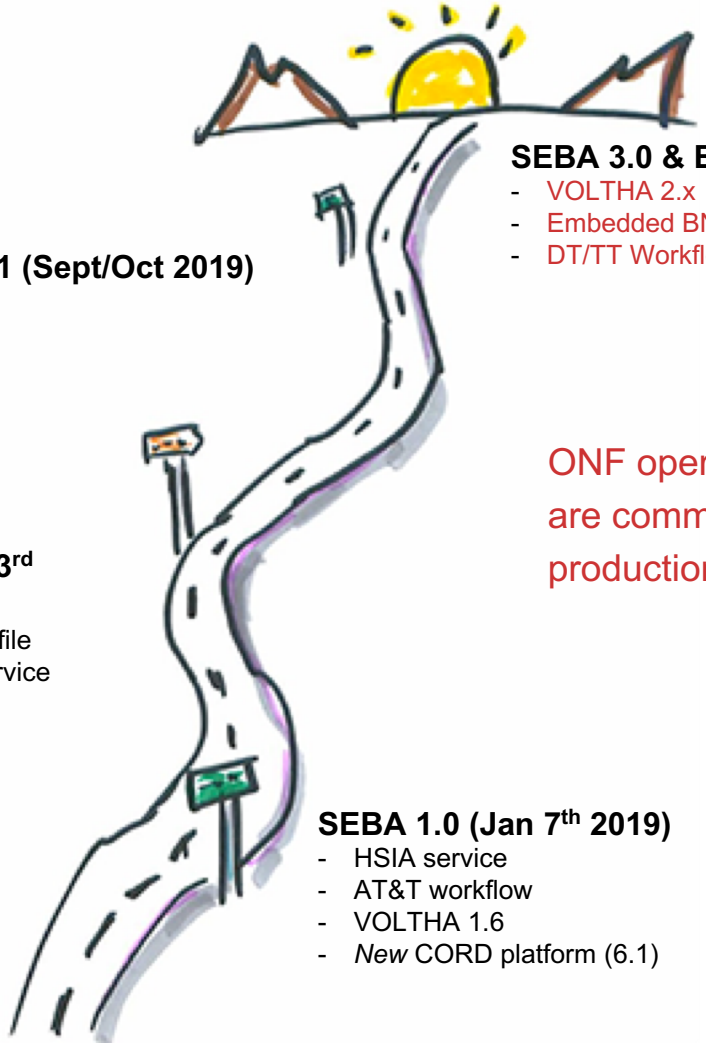

SEBA 3.0 & Beyond
- VOLTHA 2.x
- Embedded BNG
- DT/TT Workflows

SEBA 2.1 (Sept/Oct 2019)
- BAL 3.1

SEBA 2.0 alpha (July 3rd 2019)
- Technology & Speed Profile
- AT&T workflow, HSIA service
- VOLTHA 1.7, BAL 2.6

SEBA 1.0 (Jan 7th 2019)
- HSIA service
- AT&T workflow
- VOLTHA 1.6
- *New* CORD platform (6.1)

ONF operators AT&T, DT, and TT are committed to taking SEBA to production

SEBA: SDN Enabled Broadband Access

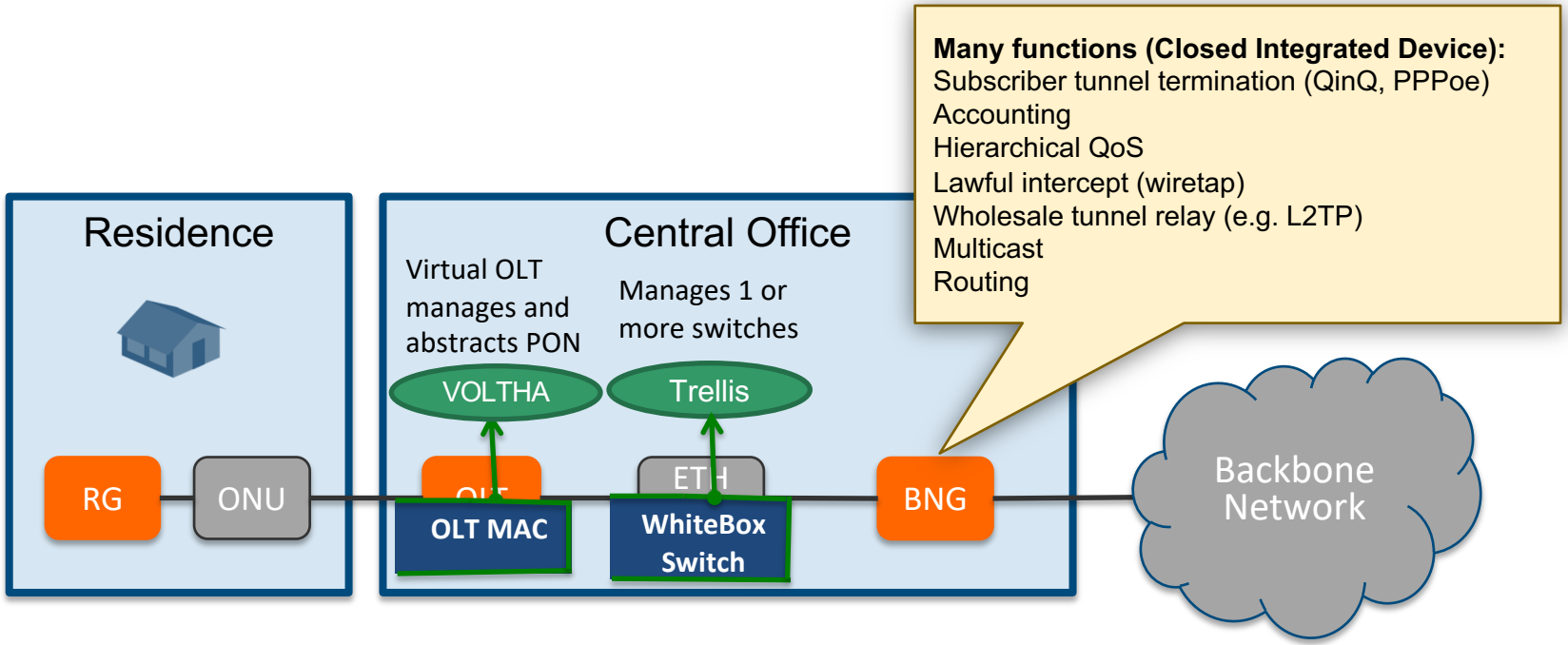

RG – Residential Gateway
OLT – Optical Line Termination
BNG – Broadband Network Gateway

SEBA with SD-BNG

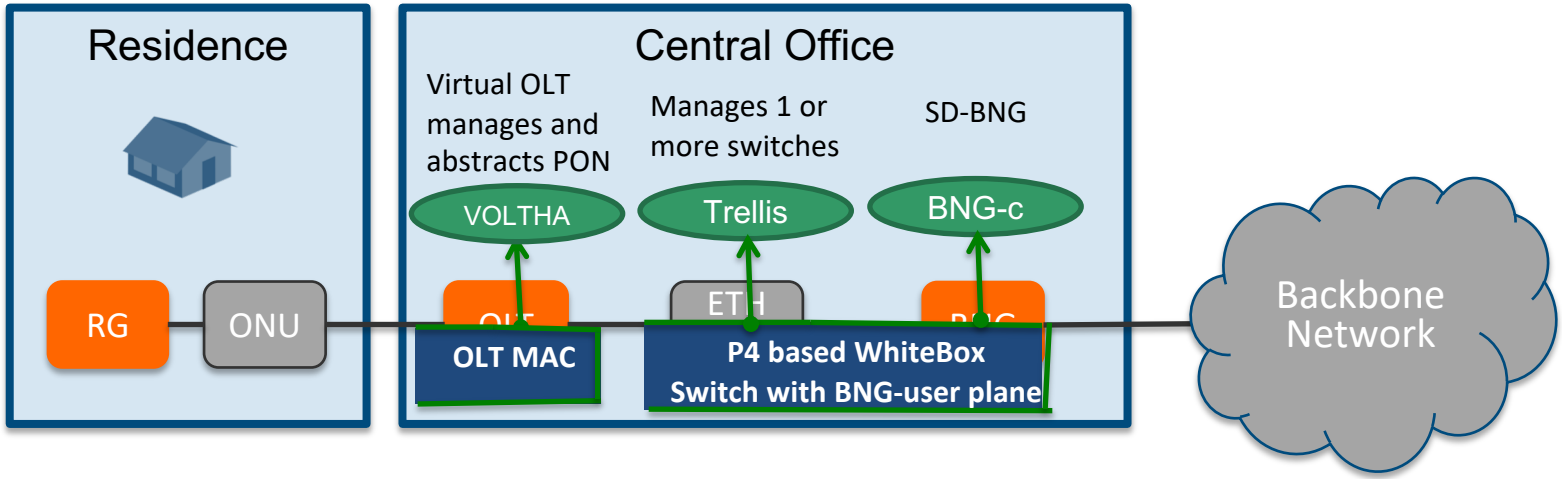

RG – Residential Gateway
OLT – Optical Line Termination
BNG – Broadband Network Gateway

SEBA with SD-BNG

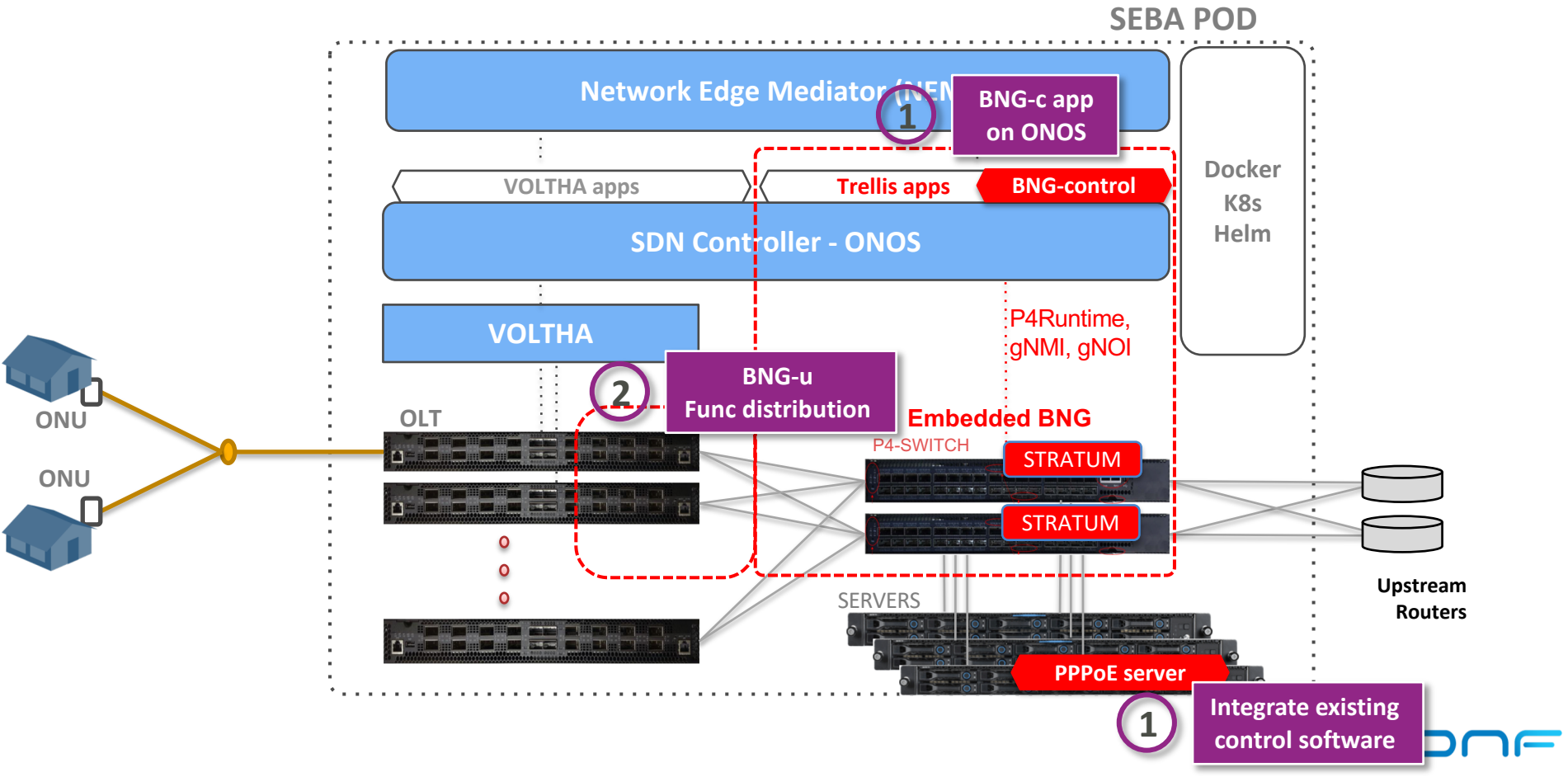

SD-BNG Integration with SEBA
Demo at ONF Connect

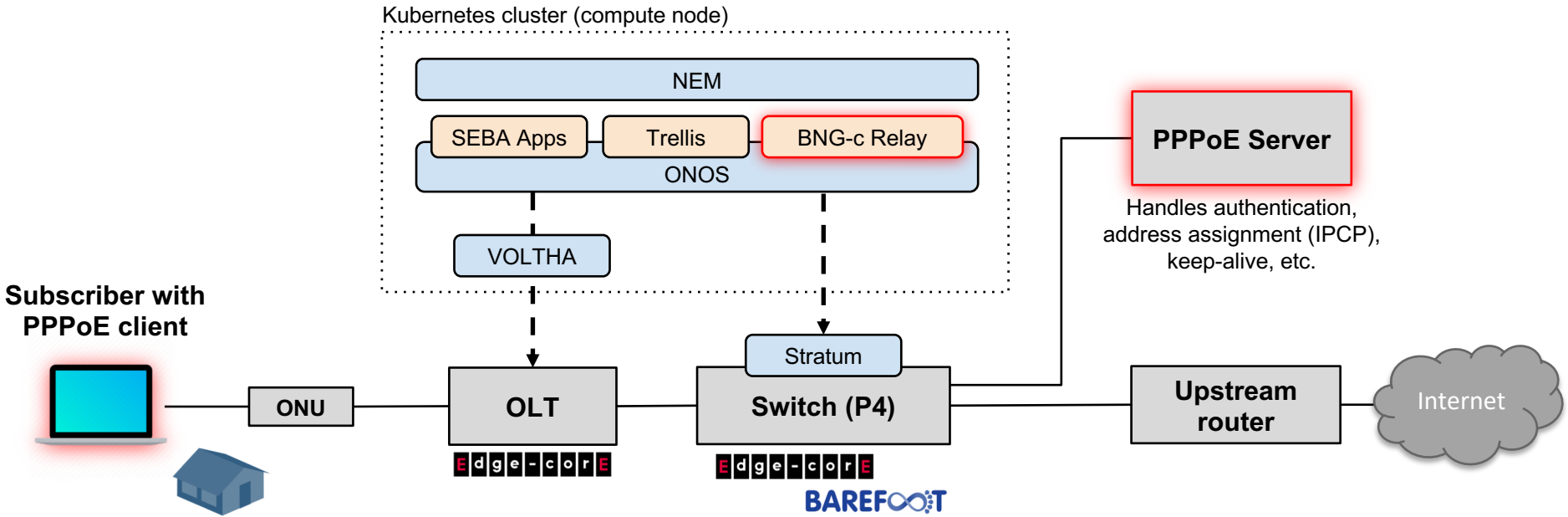

Transforming Wireline and Mobile Access and Edge

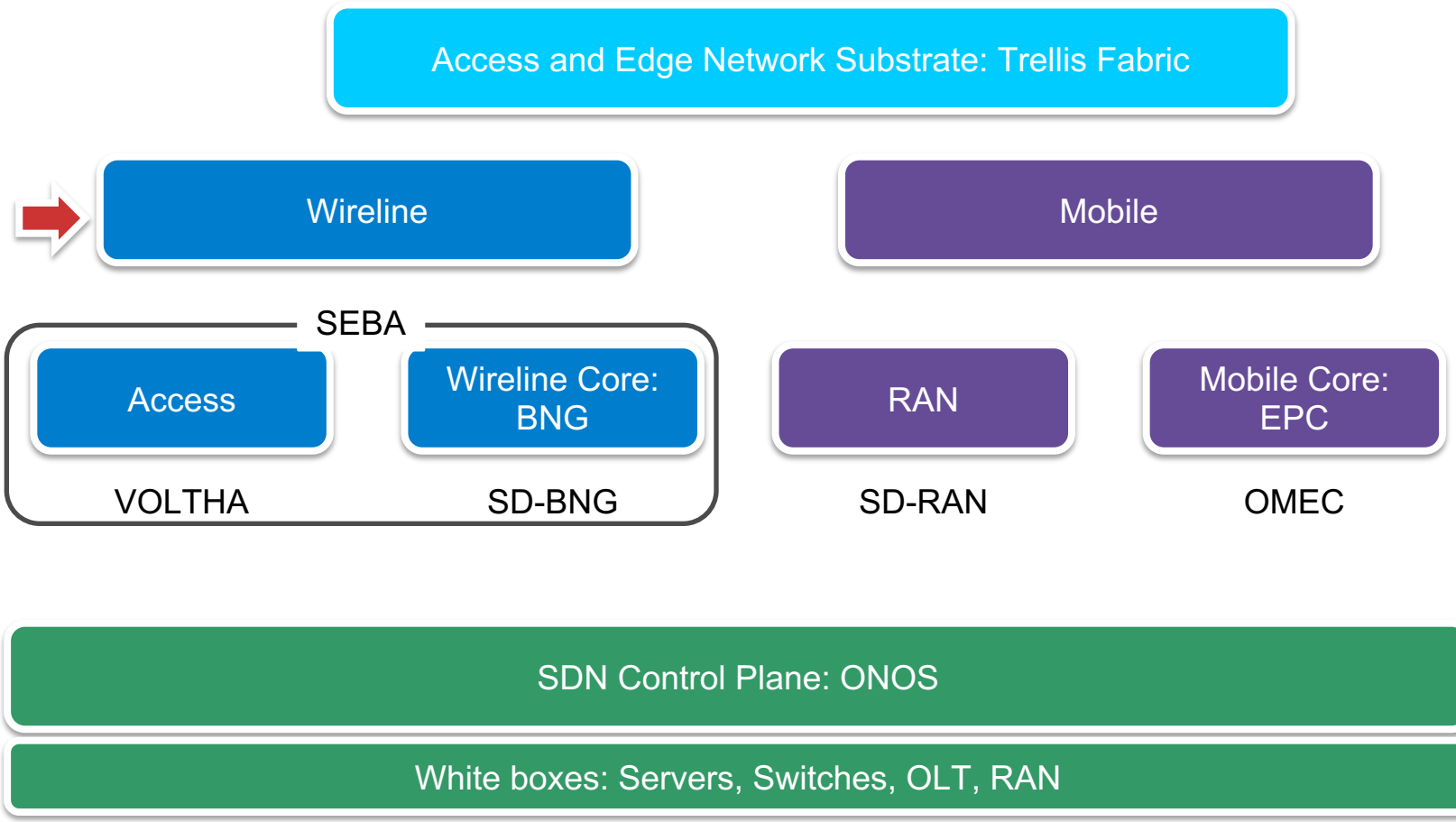

RAN Evolution: Towards SD-RAN

SD-RAN Controller can also control non-disaggregated eNBs/gNBs

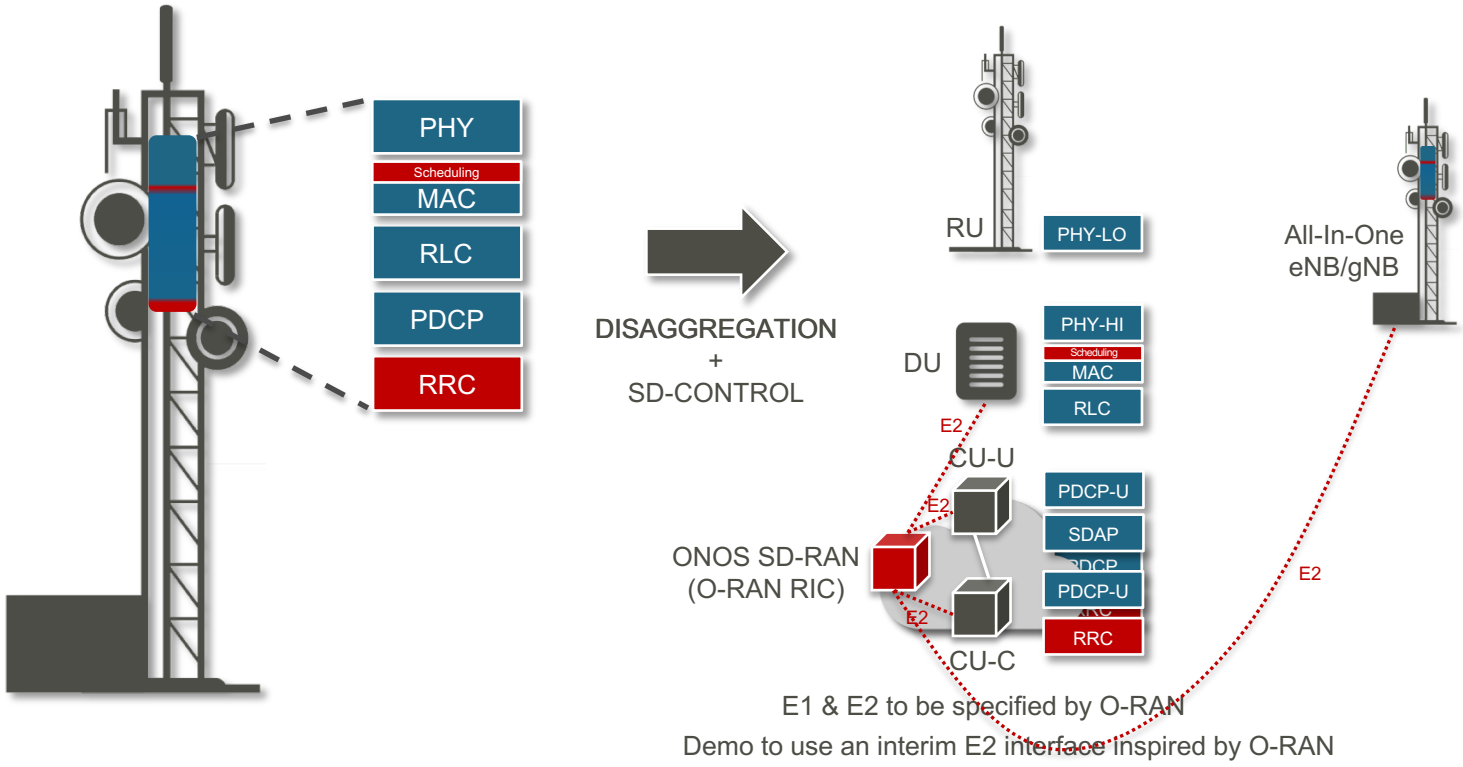

ONOS-Based SD-RAN Controller

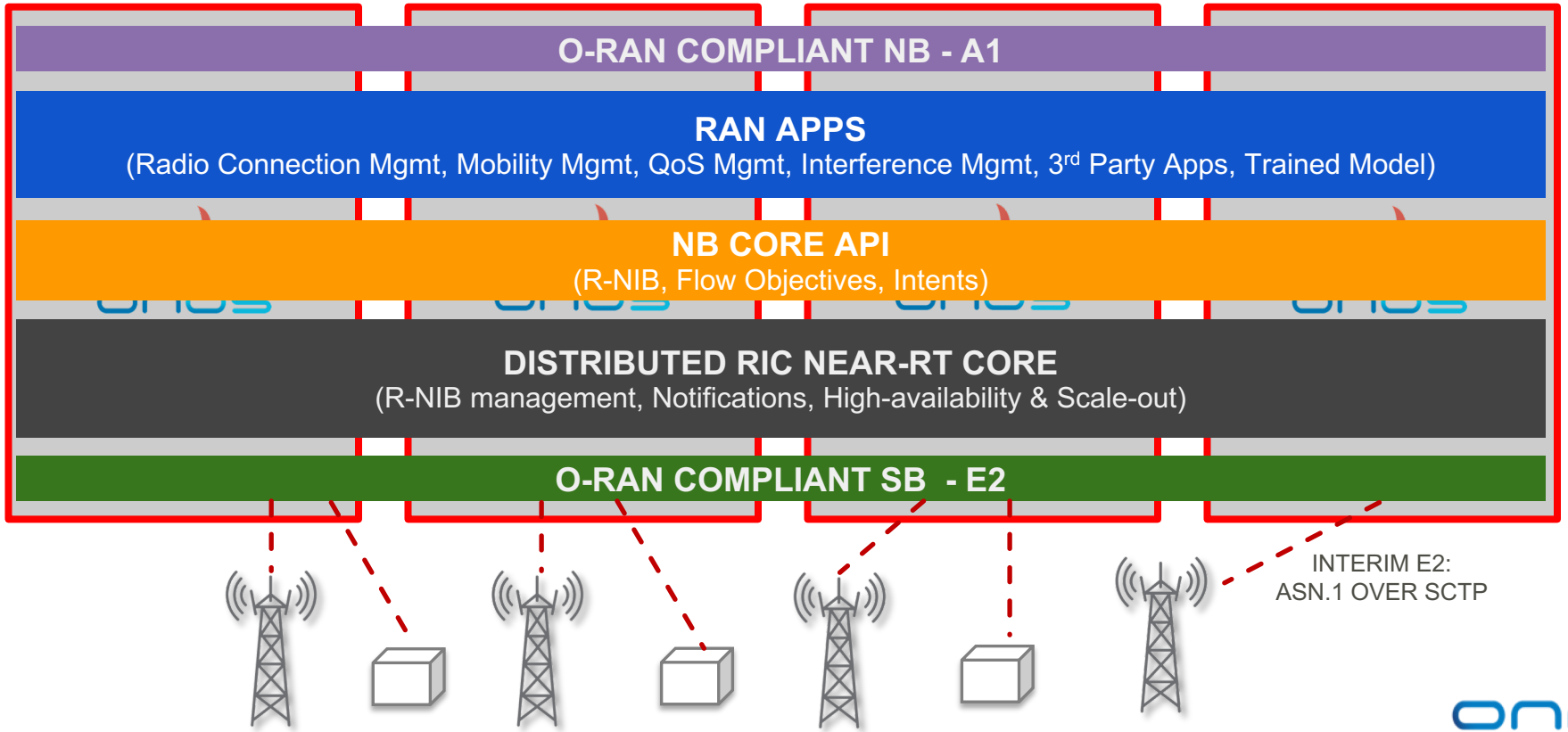

OMEC: Pieces Moving Towards Productization

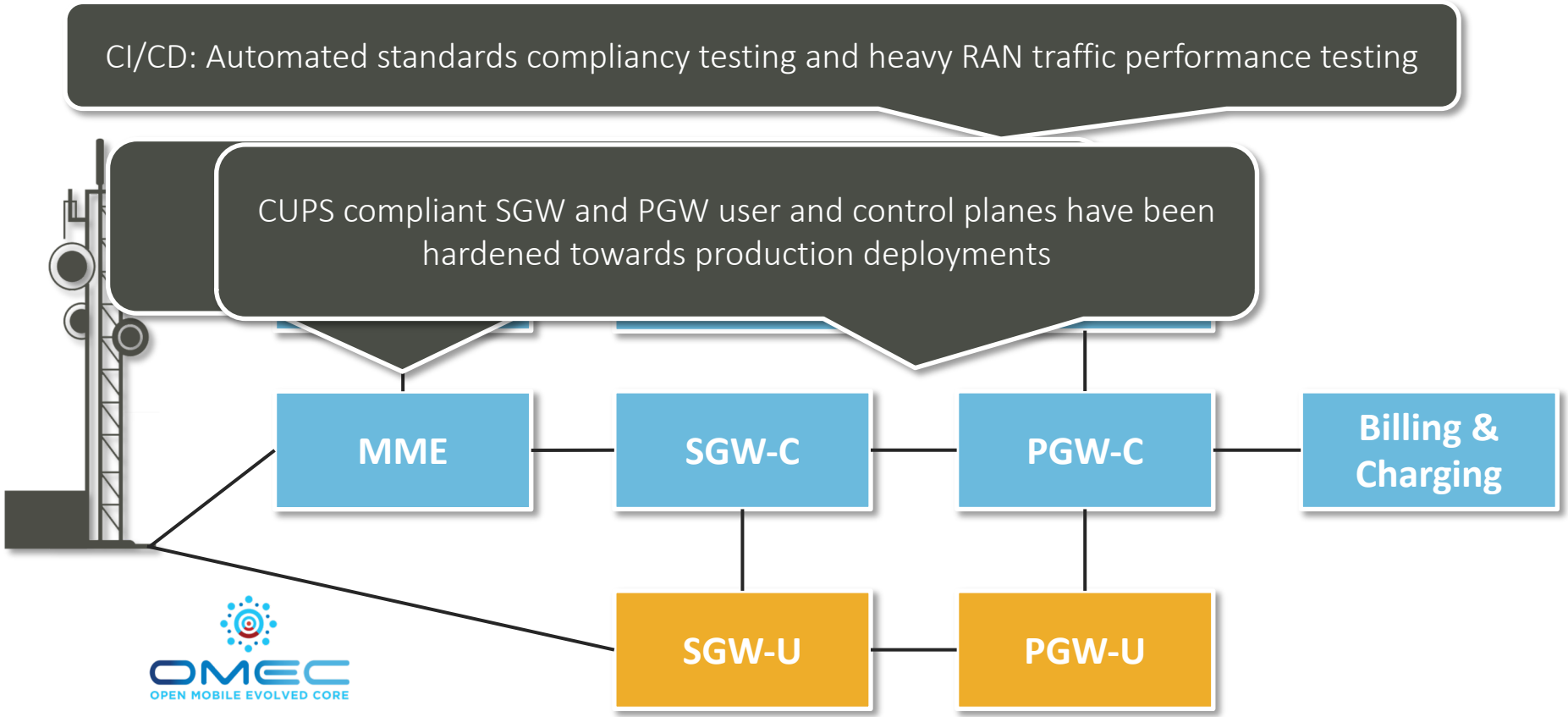

OMEC Field Trials

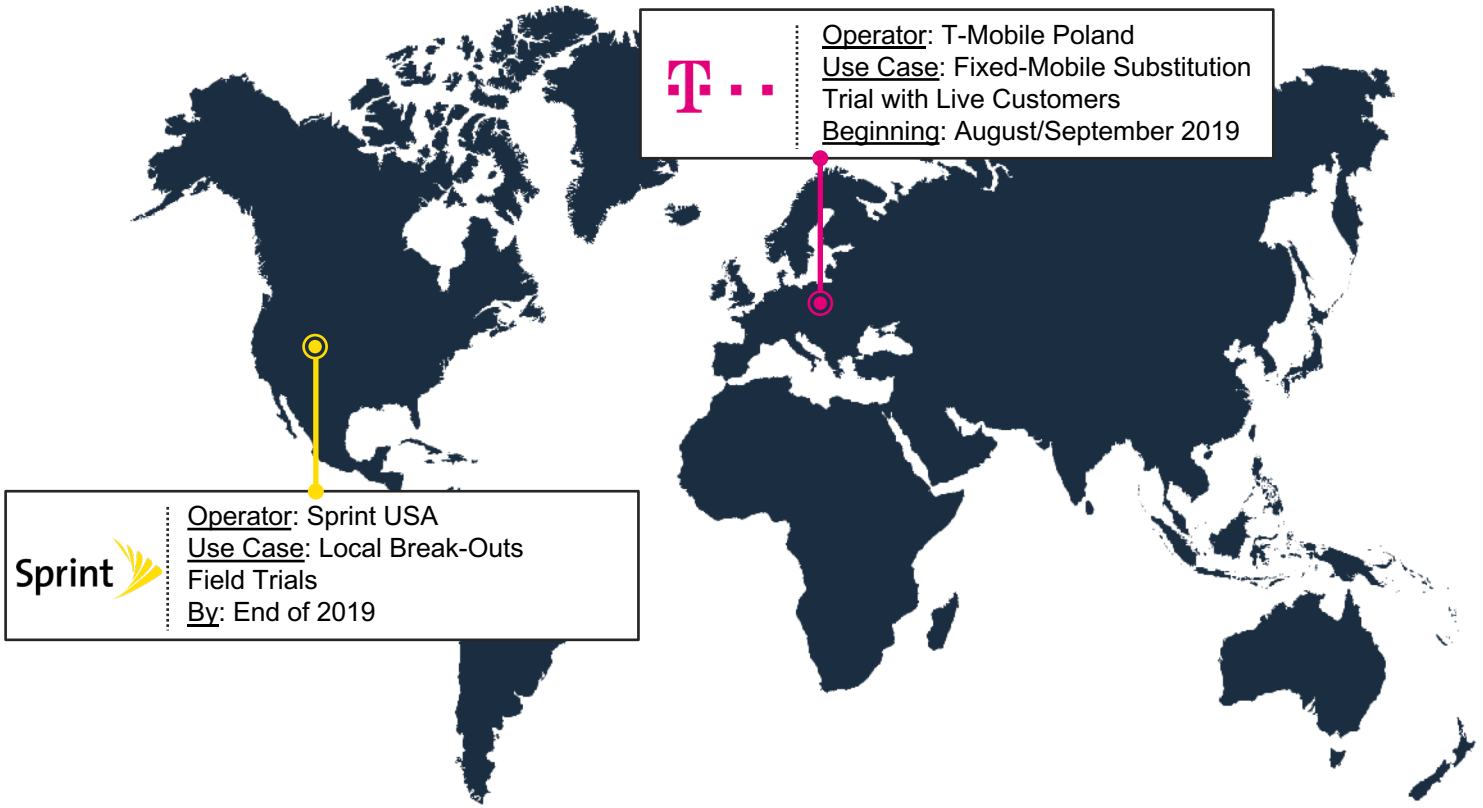

Mobile Edge Cloud with Hybrid Cloud Connectivity

Demo at ONF Connect

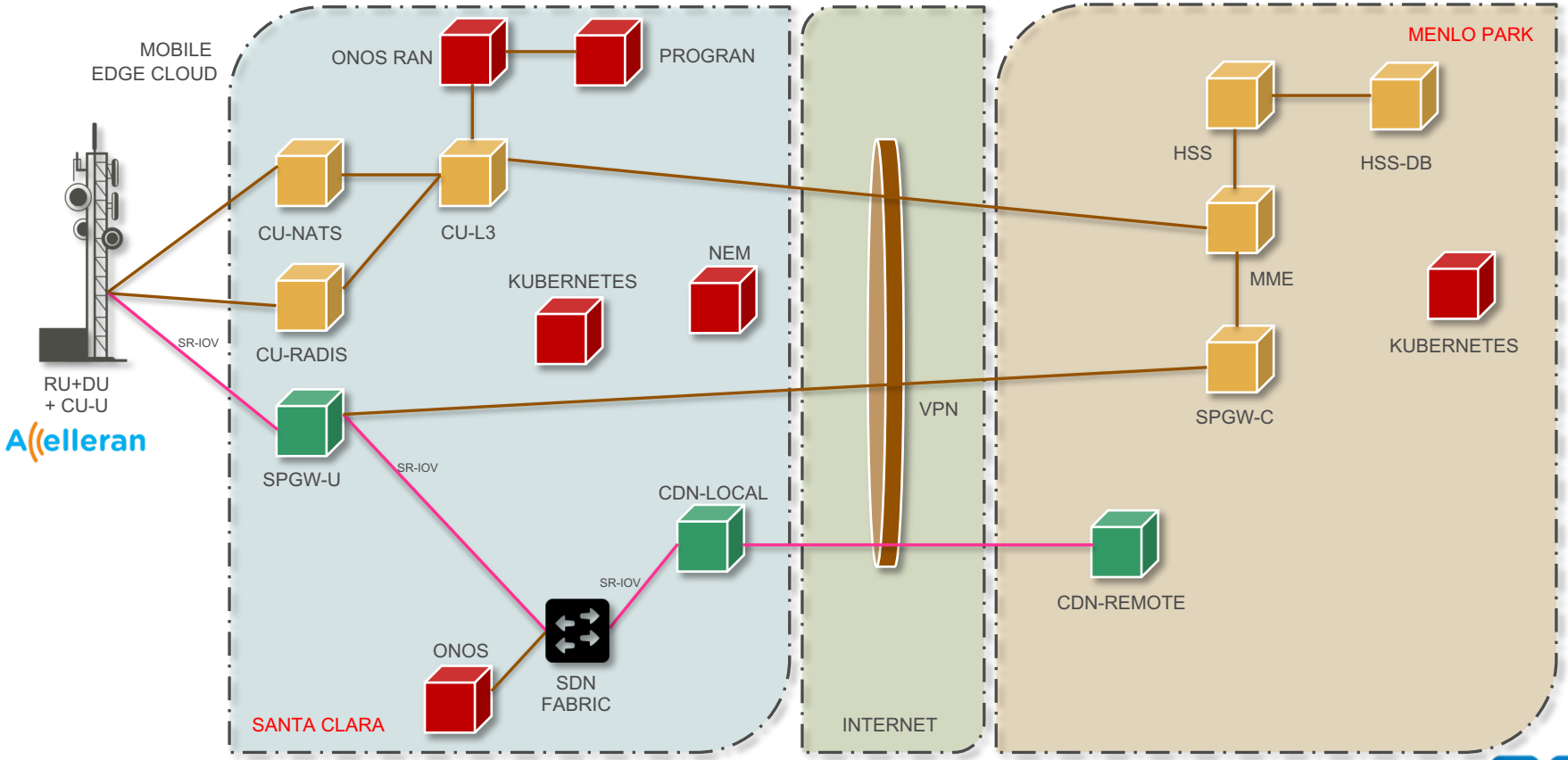

Mobile Edge Cloud Software Stack

Piecing SD-RAN, OMEC and Hybrid Cloud Connectivity Together

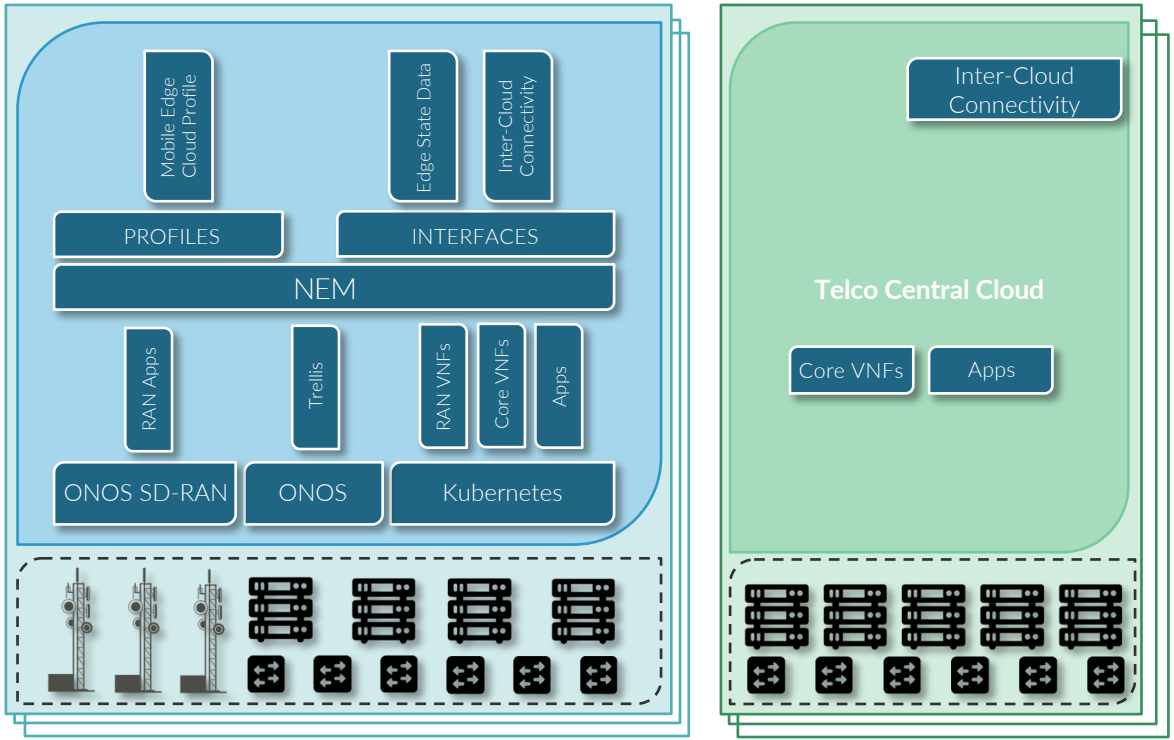

ONF's First Official Mobile Edge Cloud Release

Graduating from Demo Quality To Field Trial Quality Towards Production Readiness

China Unicom will use this platform in its field trials for SD-RAN and MAEC

OMEC dev follows the same processes that other ONF projects use

Mobile subscriber state for FCAPS is OMEC based and uses OMEC processes for dev

Gateway components hardened for deployment

MME component is being enhanced towards deployment

MWC19 Barcelona

ONF CONNECT

MOBILE WORLD CONGRESS BARCELONA 26 FEB-1 MAR 2018

ons

MOBILE WORLD CONGRESS BARCELONA 27 FEB-2 MAR 2017

MOBILE WORLD CONGRESS AMERICAS LOS ANGELES SEPT 12-14 2018 — IN PARTNERSHIP WITH ctia

MOBILE WORLD CONGRESS AMERICAS SAN FRANCISCO 12-14 SEPT 2017

ONF Mobile Edge Cloud Platform
Official Release Date:
September 20, 2019

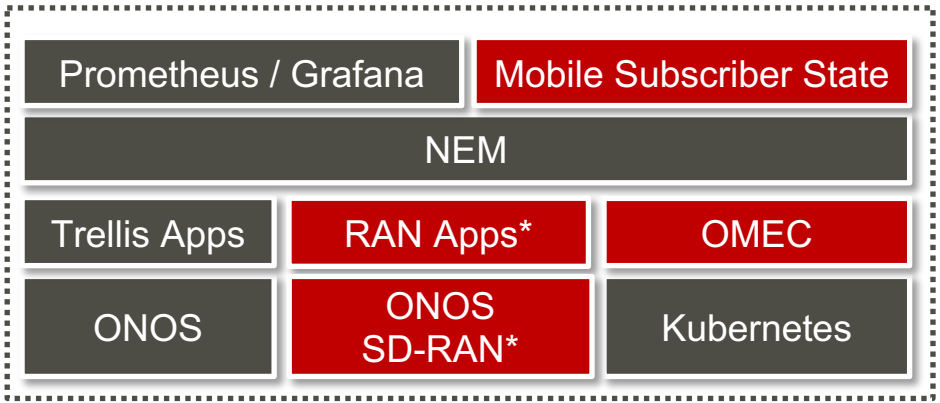

M-CORD has conducted very successful demonstrations

Focus has been on showcasing cutting-edge technology

SD-RAN controller is based on ONOS which has been hardened for Trellis

Leverages the ONOS SEBA platform which is

Further development will be in synch with ONOS processes

RAN Apps development will follow the same processes that other ONF projects use

* Will not be part of v1.0 release, but subsequent releases

Exciting Froward Looking Agenda

Next Gen SDN…

KEYNOTE

Measurement, Verification & Closed Loop Control of Networks with P4 & PISA Switch Architecture

Nick McKeown

BAREFOOT NETWORKS

ONF CONNECT

September 10 – 13

Santa Clara Marriott

Silicon Valley

Join me & hear more at ONF Connect

OPERATOR HOSTS: AT&T, China unicom中国联通, COMCAST, T··, Google, NTTGroup, Türk Telekom

ONF

Overview: Next-Gen SDN Stack

Nate Foster
Associate Professor
of Computer Science,
Cornell University

Timon Sloane
VP, Marketing &
Ecosystem, ONF

Brian O'Connor
MTS, ONF

Thomas Vachuska
Chief ONOS Architect, ONF

Stratum Going Open Source on the Following Devices

Switch Vendor / *Switching ASIC*	DELL	DELTA	Edge-corE NETWORKS	Inventec	QCT	STORDIS
BAREFOOT NETWORKS **Tofino** *Up to 6.5 Tbps*		**AG9064v1** *64 x 100 Gbps*	**Wedge100BF-32X** *32 x 100 Gbps* **Wedge100BF-65X** *65 x 100 Gbps*	**D5054** *32 x 100 Gbps + 48 x 25 Gbps*		**BF6064X** *64 x 100 Gbps*
BROADCOM **Tomahawk** *Up to 3.2 Tbps*	**Z9100** *32 x 100 Gbps*		**AS7712** *32 x 100 Gbps*	**D7032** *32 x 100 Gbps*	**T7032-IX1** *32 x 100 Gbps*	

Near-term future platforms:

- Additional platforms for existing targets (ONLPv2 porting)
  - Existing vendors + Asterfusion, ...
- Mellanox Spectrum / SN2700 via PINode and ONLPv2
- Trident 2 platforms via BCM SDK6 wrapper
- Datacom platforms (PowerPC-based)

Asterfusion

Mellanox TECHNOLOGIES

DATACOM

Final Takeaways

ONF and its community are on the path to transforming wireline and mobile access and edge

Our platforms are rapidly maturing and getting ready for production deployment

Our operator partners are committed more than ever